A Project On

Electronic Toll Collection System Using RFID Technology.

A project submitted to the Islamic University as a minor project at 3rd year for the Degree of Hon's of Science in Electrical & Electronic Engineering (EEE).

Submitted By :

Roll no: 1515032

Reg. no: 1166

Session: 2015-16

Dept. of Electrical & Electronic Engineering Islamic University, Bangladesh.

DEPT. OF ELECTRICAL & ELECTRONIC ENGINEERING
ISLAMIC UNIVERSITY, BANGLADESH.

CERTIFICATION

I here by certify that the period entitled a project on "**Electronic Toll Collection System Using RFID Technology**" Submitted by **Md. Forhad Hossain**, the student of the Dept. of Electrical and Electronic Engineering. Roll No.1515032, Reg. No.1166, Session: 2015-2016 , Islamic University, Kushtia, Bangladesh for the degree of B.Sc. in Islamic University, kushtia, Bangladesh has been completed under my direct supervision.

Signature : ……

Date : ……....

Dr. Md. Mahbubar Rahman .
Professor
Dept. of Electrical and Electronic Engineering.
Islamic university, Kushtia, Bangladesh.

ACKNOWLEDGEMENT

All praises belongs to Almighty Allah, the most merciful, the most beneficent and the most kind for giving me the opportunity, courage and enough energy to carry out and complete the project work.

Then, I would like to express my deepest gratitude to my respected supervisor, **Dr. Md. Mahbubar Rahman**, Professor, Dept. of Electrical and Electronic Engineering, Islamic university, Kushtia, Bangladesh who has continuously given me support, ideas and guidance. It would be difficult to complete the work without his support and guidance as well. May Allah give him a long and peaceful life.

Lastly, for those who have given me support indirectly or directly, many thanks to all of you and may Allah bless you for the good deed you have done In-shah-Allah. Thank you very much.

MD. FORHAD HOSSAIN

DEDICATION

DEDICATED TO

MY PARENTS

& TEACHERS

ABSTRACT

Today, due to the increase in the vehicles, there is a lot of gathering of the traffic at the toll booths. The main reason for this traffic at the toll booths is due to the manual working of the toll tax collection at the booths. Each vehicle on an average need to stop at the tool booth for about a minute for the payment of the toll tax. In order to decrease this traffic, we decided to work on the construction of a project which reduces the manual work and hence increases the vehicle speed passing by the toll booth. Also I decided to develop a project which allows the vehicles just to pass through the booth without the need to stop. This will increase the speed of the passing by vehicles allowing them to pass through the booth without stopping and also will reduce the manual work and as a result reducing the traffic gathering at the toll collecting booths.

In this project I will discuss RFID based Smart Toll Collection System as a solution to solve the traffic problems and also to maintain transparency of the toll collection system. Our aim is to make a digital toll collection system which will be less time consuming and automated. This project focuses on an electronic toll collection (ETC) system using radio frequency identification (RFID) technology. The proposed RFID system uses tags that are mounted on the windshields of vehicles, through which information embedded on the tags are read by RFID readers; the proposed system eliminates the need for vehicle owners and toll authorities to manually perform ticket payments and toll fee collections, respectively. Data information are also easily exchanged between the vehicle owners and toll authorities, thereby enabling a more efficient toll collection by reducing traffic and eliminating possible human errors.

In calculation, Economical analysis of the automatic toll collection system is also presented and is compared with the manual ticketing base system.

TABLE OF CONTENTS

CERTIFICATE OF THE SUPERVISOR ..... **Error! Bookmark not defined.**
ACKNOWLEDGEMENT 4
DEDICATION 5
ABSTRACT 6
TABLE OF CONTENTS 7
Introduction 10
1.1 Introduction 10
1.2 The concept of Toll Station 10
1.3 What is a Toll Station? 10
1.4 The development of electronic toll plaza 11
1.5 Problems with the Traditional toll collection system 11
1.6 Advantages of Electronic toll collection system 12
1.6.1 Increased Capacity 12
1.6.2. Fuel saving 12
1.6.3. Operating cost saving 12
1.7 Motivation and Objectives 12
1.7.1. Motivation 12
1.7.2. Objectives 12
1.8 Background of our project: 13
1.9 Different Types of Electronic Toll Collection System 14
1.9.1. Barcode-based Electronic Toll Collection System: 14
1.9.2. ANPR (Automatic Number Plate Reader) 14
1.9.3. Calm active infrared 14
1.9.4. VPS-technique (Vehicle Positioning System) 14
1.9.5. RFID-based Electronic Toll Collection System: 15
1.10 Summary of our project: 15
System Operation 16
2.1. Application area of the project: 16
2.2. Comparison between proposed and existing toll system 16
2.3. Working principle of this project 17
2.4. Sufficient amount in account 18

2.5 Insufficient amount in account 19
2.6 Block Diagram of the Project 19
2.7 Description 19
Hardware Components 22
3.1 Introduction 22
3.2. Hardware components 22
3.2 Arduino Nano ATmega328p 22
3.3 Pin Configuration : 23
3.4 Technical Specifications 23
3.5 LCD1602 with Blue backlight 26
3.6. 4X4 Flexible Matrix Keypad With ABC Black & Red Color 27
3.6 RC-522 13.56 MHz RFID Reader 28
3.6.1 INTRODUCTION TO RFID 28
3.6.2 WHAT IS RFID? 29
3.6.3 Transponder: 29
3.6.4 Active tags: 30
3.6.5 Passive tags: 30
3.6.6 ADVANTAGES OF RFID 30
3.6.7 LIMITATIONS OF RFID 30
3.6.8 APPLICATIONS OF RFID 31
3.7 SG90 Mini Gear Micro Servo Motor 9g 31
3.7.1 What is a Servo Motor? 31
3.7.2 Specifications 32
3.8 IR Obstacle Avoidance Module 32
3.8.1 Infrared obstacle avoidance sensors 32
3.8.2 Specifications 32
3.9 Jumper Wires 33
3.10 Solder less Breadboard 33
3.11. 3.3-5V Continuous Tone Active Buzzer 34
Arduino Interfacing Code 35
4.1 Coding 35
Picture of my Project 40
Conclusion 41

Future scope..... 42
References..... 43

INTRODUCTION

1.1 Introduction

Our life is changing very fast and the role of automation in our day to day life is increasing at a very fast rate. This is the motive behind our project i.e. “Automation”. Day by day the number of vehicles passing over the road is increasing due to which the road condition is decaying rapidly. The government sponsors the price of road construction and road maintenance. The government has some source of money to build and maintain these roads & this source is the Toll Station. At the onset, the goal of our project group was to design an Automatic tolling system for collecting toll. After studying various techniques like weight-based systems, bar coding etc. we chose Radio frequency identification, which is an emerging technology applied for tracking and communication. RFID (Radio frequency Identification) is an area of automatic identification that has quickly been gaining momentum in recent years and has now being seen as a radical means of enhancing data handling processes, complimentary in many ways to other data capture technologies such as bar coding. In today’s era of technology, where machines are being extensively used in all the fields we are trying to emulate concept, which will be of great use in public transport systems. Today a person has to travel long distances into vastly unknown territories for job, business, or even for tourism. As the vehicles are increasing and roads are falling short, nowadays we see frequently traffic jams or long queues at the toll stations waiting for paying the toll. Paying the toll every-time through cash or checking the pass takes a lot of time. And today Time is more precious than money. Therefore our project is aimed at reducing time consumed for manual transactions and human effort.

1.2 The concept of Toll Station

A toll road, also known as a toll way, turnpike, pike or toll pike, is a road for which a driver pays a toll (that is a fee) for use. Similarly there are toll bridges and toll tunnels. Non-toll roads are financed using other sources of revenue, most typically gasoline tax or general tax funds.Tolls have been placed on roads at various times in history, often to generate funds for repayment of toll revenue bonds used to finance constructions and operation. The building or facility where a toll is collected may be called a toll booth, toll plaza, toll station, or toll gate.

1.3 What is a Toll Station?

Two variations of toll roads exist, barrier (mainline) toll plazas and entry/exit tolls. On a mainline toll system, all vehicles stop at various locations along the highway to pay a toll. While this may save money from the lack of need to construct tolls at every exit, it can cause lots of traffic congestion, and drivers could evade tolls by going through them as the exits do not have gates. With entry/exit tolls, vehicles

collect a ticket when entering the highway, which displays the fares it will pay when it exits, increasing in cost for distance travelled. Upon exit, the driver will pay the amount listed for the given exit. Should the ticket indicate a traveling violation or be lost, the driver would typically pay the maximum amount possible for traveling on that highway. Modern toll roads often use a combination of the two, with various entry and exit tolls supplemented by occasional mainline tolls.

1.4 The development of electronic toll plaza

Now a day's traffic problem is a very severe problem in our country. In Bangladesh, every day we have to face traffic jam for several hours which is very annoying at the same time creating a huge trouble in our daily life. Traffic jam mainly causes for reckless driving and also for the rash of the vehicles in the road. For the reduction of traffic problem government has made many bridges, fly over's and bypass roads. People have to give toll when they pass these by any vehicle. Unfortunately, the toll collection system is manual in our country which takes many times to pass the vehicles and creating traffic jam. Here we introducing Electronic toll collection system using RFID technology which will be an automatic system, will not stop the vehicles as well as this system will help to reduce the traffic jam. Here, the payment will be taken from the bank account of the vehicle owner and he will receive a message from the server that the toll payment has been taken. In addition, our system will also help to solve the traffic severe crashes, which is mainly caused by over speeding as here we have used speed breaker to slow down the speed of the vehicles when RFID tag will read the information of the vehicles.

1.5 Problems with the Traditional toll collection system

Traditional toll collection system or manual toll collection system is the simplest form of toll collection, in which a collector operating from a booth collects the toll. This method is slower and sometimes not perfect also. One or two persons sit in the toll collection booth and stop each vehicle to collect the toll manually. The collector gives a memo to the drivers as a record of toll payment. Moreover, in Bangladesh lots of corruptions are happening in this sector. There is no central controlling system for the toll collection, all the information regarding payments ad vehicles are not saving in a database or website. As a result corruption is happening and government is not getting all the toll money properly.

Problems:

- This system is slower
- Creates traffic jam as every vehicle has to stop
- Corruption is happening

1.6 Advantages of Electronic toll collection system

Electronic toll collection system is a digital system of collection toll from vehicles without stopping them. Electronic Toll Collection lanes improve the speed and efficiency of traffic flow and save drivers' time. An Electronic toll collection system is capable of electronically charging a toll to an established customer account. The system can determine whether a passing car is registered, automatically charging those vehicles, and alert the local highway patrol about users that are not registered. The Electronic toll collection method allows vehicles to pass through a toll facility without requiring any action or stopping.

1.6.1 Increased Capacity

Electronic Toll Collection System will increase the capacity of transport when passing the toll plaza as we will divide the road by four lane. Moreover our system is automate so our system will be increased the capacity of transport when passing the toll booth.

1.6.2. Fuel saving

The deceleration, acceleration and idling is completely eliminated. This results in gas saving for the patrons using Electronic Toll Collection System. The elimination of acceleration and deceleration results in reduction of the operating cost of the vehicles.

1.6.3. Operating cost saving

Over a period of time, the toll collecting cost is reduced. There is reduction in the manhour required as the system does not require any human interaction for the toll transaction.Time saving ETC users do not stop for paying toll, thus there is considerable saving in the travel time. Besides the travel time reliability is increased as the travel time can be estimated fairly accurately.

1.7 Motivation and Objectives

1.7.1. Motivation

The motivation towards working on this project is to solve the traffic problems and also to maintain transparency of the toll collection system. Our aim is to make a digital toll collection system which will be less time consuming and automated. Moreover, Economical analysis of the automatic toll collection system I also presented and compared with the manual ticketing base system.

1.7.2. Objectives

The objectives:

1. Introduce Electronic Toll Plaza in Bangladesh.
2. To compare various aspects of this existing system with the electronic toll collection system.
3. To find out the economic benefits of introducing Electronic Toll Collection

1.8 Background of our project:

Transportation is the backbone of any country's economy. Advancement in transportation systems has created a lifestyle characterized by freedom of movement, trade in manufactured goods and services, high employment levels and social mobility. In fact, the economic wealth of a nation has been closely tied to efficient methods of transportation. Rapid development of the country especially in providing good infrastructure facilities to the people has constantly become an important agenda to the Government. To realize the Government's aspirations the Roads and Highways **16** Department of Bangladesh strives to guarantee modern, efficient, quality highway's that are attuned towards growth of the nation. Tolled highways were built looking at many factors, one of them being the heavy traffic and congestions around Meghna Bridge Toll Plaza. For many cases, tolled highways in major cities are basically roads that have been upgraded to highways. The situation becomes more complex when it involves a spectrum of local infrastructure that consists of housing areas, industries, factories and schools. The network of highways built, however, helps with the development of surrounding communities and defines the highways as the main route for local residents. The strategic location also encourages locals to use the highway more than once and here is where during peak hours toll plazas become as congested as normal roads. Delay and queuing problems are most common in daily life situation, especially in traffic. Many roads and highways in Bangladesh have heavy traffic congestions due to driving convenience, such as delays and queuing problems at toll plazas. In effort to have this issue resolves as an innovative supervision committee, Roads and Highways Department encourages the use of modern technology. Dhaka-Chittagong National highway is one of the busiest highways of Bangladesh. A huge volume of traffic moves everyday along this road between the capital city and the commercial capital of the country. The vehicles moving through this route have to cross the Meghna Bridge and pay tolls at Meghna Toll Plaza. But due to delay in collection system, the users of this road normally have to face long queue. All the parties concerned are being negatively impacted by this delay. The passengers and the transport owners are to sacrifice the time while the toll collection authority is being deprived of getting more tolls within a stipulated time. According to a traffic survey in 2005, about 3584314 vehicles were recorded to cross Meghna Ghat toll plaza.**17** With passage of time, it is expected that more vehicle would be passing through the bridge and the problem of long queue would be increased. Introduction of an electric toll collection system may be one way to solve this problem. It would benefit all the parties concerned. The benefits of toll plaza can be broadly divided into three categories: benefits of toll agency, user benefits, and social benefits. The toll agency benefits include reduction in operating cost, reduction in man labor, reduction in maintenance cost, and enhanced cash handling. The user benefits include time saving due to the elimination of the hassle of digging for change and the elimination of acceleration and deceleration as the vehicles do not stop for toll transaction.

1.9 Different Types of Electronic Toll Collection System

1.9.1. Barcode-based Electronic Toll Collection System:

Barcode-based Electronic Toll Collection System is a sub category under DSRC. In this a bar-coded sticker is attached to the vehicle and read by a laser scanner when it passes through the toll plaza illustrates working of a typical DSRC system for electronic tolling. It is the simplest as well as oldest technology. It is used in various applications such as in library for managing book record, shopping plazas to take an account of sale and purchase, food industry to store food details and many more. Despite of all these it also has many drawbacks in order to be used for toll collection system such as lack of reliability, less accuracy in bad weather, lack of flexibility, slow data read rate, less storage information and easy to be theft.

1.9.2. ANPR (Automatic Number Plate Reader)

Another important technology is ANPR. It utilizes a stationary camera to record and identify the number plate of vehicles passing through toll plaza. The identified license numbers are matched in the database and toll is deducted. If the recorded number is not read properly or not found in the records, it issues an enforcement violation alarm to the alert the authorities. In this way, it simultaneously solves two objectives; identification of vehicle for deduction of toll tax and recording violation enforcement alert. The Indian government has started issuing ―high security number plates. Thus this technology will also be helpful to detect the stolen vehicles and vehicles with fake number plates. It also has constraints of high cost and reduced accuracy under tempestuous environment tonditions.

1.9.3. Calm active infrared

Calm active infrared is a relatively new technology. It is similar to RFID system, the only difference is that it has an active infrared unit installed on vehicle which contains all the information. If we compare to RFID, it has a faster data reading rate, reliability, accuracy, efficiency and it works well in all environment conditions. It also comes over the problem of interference. Lack of interoperability, vendor support and high cost are the roadblocks in usage of this technology.

1.9.4. VPS-technique (Vehicle Positioning System)

Another one is VPS-technique consists of worldwide satellite navigation system incorporation with a communication mechanism. It works with the help of a global positioning system (GPS) unit installed on vehicle attached to an on board unit (OBU) , which stores the coordinates of the vehicle and send the transaction information to the toll authorities via GSM. This system is highly reliable, accurate and efficient. The efficiency of this system is not affected by environmental conditions. It provides a payment option only for the distance travelled and is highly flexible in generating the corresponding payment details. It can also be used by the police petrol for highway surveillance and theft prevention of automobile. The

associated shortcomings for this system are its excessively high installation, running and maintenance cost, careful handling, requirement of extra power and other accessories. Present study has made it very clear that there are no clear trade-offs among the above mentioned technologies. Due to this, it becomes an onerous task to move further to decide the best option among the existing ones or to develop a newer technology. In such a state of ambiguity when one is not even able to choose the best among the existing alternative, there is no space for the question of adopting a hybrid technology. It also de-motivate the policy makers to adopt newer advanced technologies as a single wrong decision can bring up loads of problems for **20** coming generations with huge wastage of money and time. Therefore, it becomes essential to predict the best solution in terms of best alternative for such problems using a highly subjective decision making technique.

1.9.5. RFID-based Electronic Toll Collection System:

The best and easy technology is RFID-based Electronic Toll Collection System, which has an IVU (In-vehicle unit) installed on the front windshield of the vehicle. This IVU contains a cash card for payment of road tax. At toll plaza, this is read by the RFID frequency reader or antenna. It can be either prepaid or postpaid, with gate or without gate illustrates working of RFID-based Electronic Toll Collection System. It contains more information as compared to barcode, has faster reading rate, tough to be fraudulent and also comparatively more reliable. As the number of features increases we have to compromise with the cost, simplicity and ease to use. It is also observed that sometimes it show the problem of interference among frequency of devices (mobile phones, other IVU, walkie-talkies, FM radio or other electronic gadgets) in vicinity of the toll plaza or passing vehicles. Angle of installation and alignment plays an important role for reliability and high accuracy of these systems provides a brief idea about working mechanism of RFID-based ETC technology.

1.10 Summary of our project:

Here we are trying to build a suitable computerized Toll Collection System with Manual Transaction would be selected. Secondary data on the traffic flow would be collected from the toll collectors. A primary survey would be conducted to observe the delay time, required acceleration and deceleration for various vehicles and time for transaction. An assessment of the existing system of the toll plaza would be made including the operating system being used, the efficiency of toll collection, problem faced by the toll collectors and the road users etc. An in depth analysis of the Electronic Toll Collection System would then be made. Various aspects of these two systems would then be compared and the benefit of introducing Electronic Toll Collection System would be found out in terms of saving in time, fuel and emission reduction.

SYSTEM OPERATION

2.1. Application area of the project:

A country's drastic change happens when public needs not to waste their time in roads just because of huge traffic jam. Any country can only get rid of this jam issue by taking proper steps on utilizing the roads in better way. That is why our country government has taken different types of initiative to get rid of this jam issue. So government is making lots of bridge, flyover, under pass, u-loops etc. Some of this roads are government making by own costs and some are making by taking help of private sectors. When government makes roads in collaboration of private companies, they go for different kinds of deals and that time mainly toll collection is implemented to get back the invested money of private companies. In our country lots of bridges are done with a collaboration of private companies. Those are Meghna Bridge, Gulistan-Jatrabari flyover, Mukhtarpur Bridge etc. All this bridges are made with a collaboration of government and private companies. Now these bridges are maintaining by those private companies and they are taking their invested money by collecting toll from public who uses these bridges.

2.2. Comparison between proposed and existing toll system

In our country the existing toll collection system have lots of bad sides. As money has to hand over by hand manually in the existing system, it takes more time then the electronic way to take the money. In existing system time wasting is a big issue because no one wants to waste their valuable time. On the other hand our proposed system is very time saving because it takes money automatically and give the passenger a text in his phone that how much money has deducted from his card, so passenger needs not to waste their time in giving money and asking for receipt.

2.1 Fig: Manual Toll Collection System

While waiting in a queue makes big jam in existing system because the high way roads are very busy and so many vehicles passes in every minutes but in proposed system there is no chance of waiting in a queue as the system is designed in such a way that it will be so smooth system to pay in toll plaza

2.2. Figure: Waiting in queue for toll payment

Proposed toll system has no chances of corruption as it's done totally by an electronic device but in manual system chances of corruption is so high because that is totally done by hand to hand. Our proposed system is really environment friendly because vehicles have not to wait to pay for toll and that is why less number of toxic gas are effecting environment. On the other hand existing system has a big hand to effect environment, as vehicles have to wait in queue for long time and that is why lots of toxic gas is coming out to pollute the air and cause the damage of environment. Existing system allows all vehicles to pass through the bridge, as the person collecting the toll

doesn't care whether heavy vehicles may cause damage to the bridge. In the proposed system there is a sensor which will sense vehicles weight and if the sensor found over weighted vehicle it will give an alarm, so that the vehicle cannot pass the bridge. Moreover in our country we hardly think about bridges capability of taking weight. In manual system the management of bridge authorities does not worry about if this heavy load will hamper the bridge or not. In our project we do care about the bridge so we have added a weight sensor in front of toll plaza. So if any over weighted vehicle wants to get into the bridge the weight sensor will not allow it, by this the bridge will be safe and secured from any kind of threads.

2.3. Working principle of this project

We have designed our project in such a manner that it will be very much easy and comfortable to use for all kind of people. In front of toll plaza there will be a display where it will show welcome to the bridge. After a vehicle enters to the bridge he will go ahead to the toll plaza.When the vehicle will enter to the toll plaza then vehicle detected by detector sensor. The toll gate is closed until the toll is paid by the vehicle

owner. Servo motor helps the gate to open up when it gets the signal from arduino. Arduino will only get the signal to servo motor if the actual toll is given for that vehicle. There will be RFID tag in every vehicles by which we can easily detect them. This RFID will also used as a registration of each car. All the vehicles will have an account as a general where they will keep certain amount of money to use the bridge every time. This account will be internally connected through each vehicles registration respectively. So that when ever that vehicle will pass only that vehicle will be entertained. When a vehicle will pay toll with his registered card then the amount of his toll will be deducted from his account. The message will be shown in the display of the toll gate and toll he has paid and his remaining amount in his account. So there will be no issues of over toll taking or no waste of time in changing the money. As the passenger pay the toll he will be allowed to use the bridge.

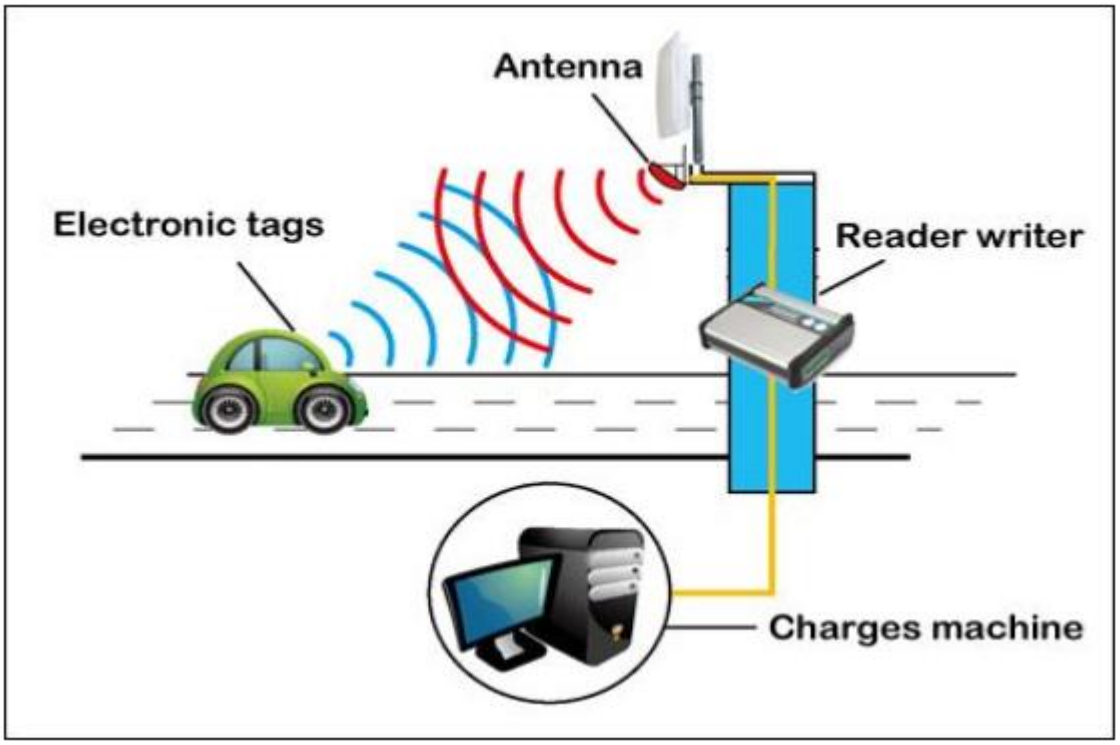

2.3. Figure: ETC toll collection system

2.4. Sufficient amount in account

Any of the vehicles using bridge will always need to have sufficient amount of money in his account. As the system is fully designed in a digital way so payment should be in online basis. In our prototype we are giving a sufficient amount of money in some vehicles to see the actual way of toll taking system.

2.5 Insufficient amount in account

It is always mandatory for any vehicle to have sufficient amount in his account but sometimes people may not remember how much money they have in their account. If any vehicle wants to use the bridge but don't have sufficient balance in his account then he will have to face a problem. He has to pay the money manually in hand and it will really take our project to that old manual system which we don't want. So, we ask all the vehicles to have sufficient amount in his account to have a simple smooth use of toll plaza. In our prototype we have kept a vehicle on this condition to see how it handles the situation. When the vehicle punch the card and the system finds that it has no sufficient balance in his account, the system gives an alarm and a massage gone to passenger that he has less amount of money then what we required for. Then the passenger has to pay the money manually by hand and use the bridge.

2.6 Block Diagram of the Project

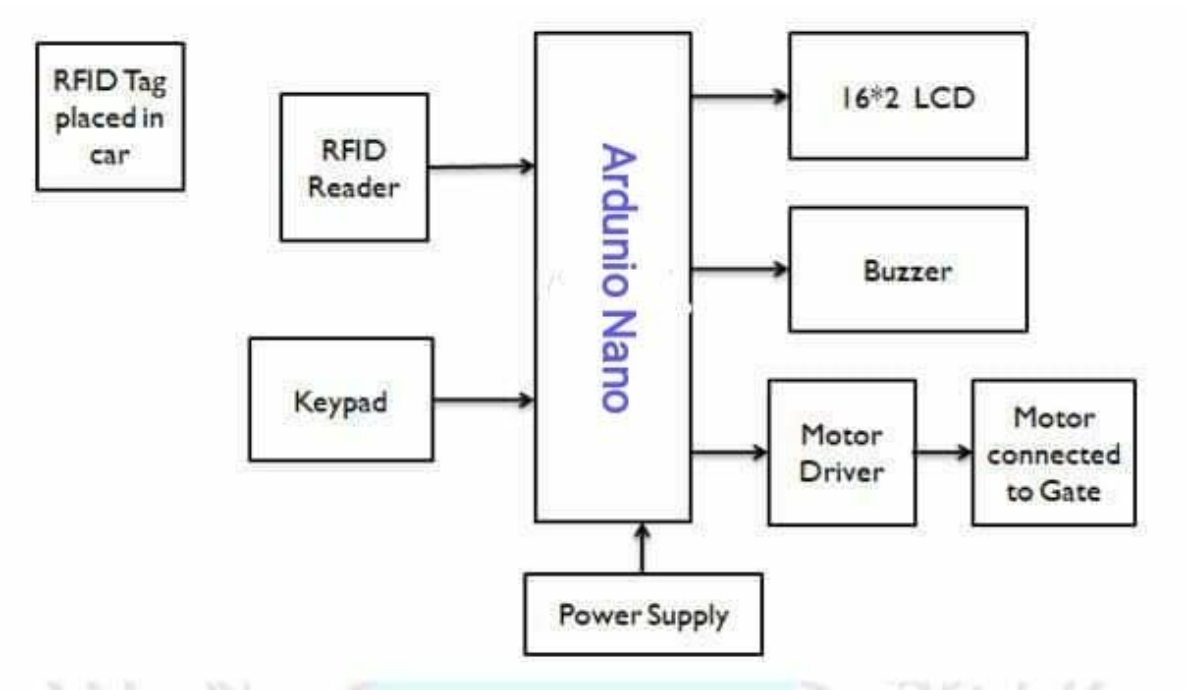

2.4 Fig: Block diagram of Project

2.7 Description

The "RFID based Toll Collection System" basically consists of following main blocks

1. RFID card: RFID cards have diverse range of functions, while provides convenience, as the cards must simply be waived or tapped in front of a reader rather than swiped. These cards are 31 used for applications as access control in security

systems, time and attendance, network login security, biometric verification, cashless payment, and even event management.

2. RFID reader: An RFID reader is a device that is used to interrogate an RFID tag. The reader has an inbuilt antenna that emits radio waves; the tag responds by sends back its data.

3. Micro controller: Micro controller senses the signal given from switches and decides the mode of operation i.e. recharge mode or toll collection mode. It fetches data from memory location and sends it to output devices like display, motor driver and buzzer. At the same time it can accept data from Keypad for recharging options and from IR receiver to sense that vehicle has passed from toll collection booth.

4. Liquid crystal Display: It consists of Liquid Crystal display (LCD).The display is various messages like valid card, invalid card, access allowed, manual access etc. We are going to use 16x2 alphanumeric displays.

5. Motor Driver: Microcontroller output is 5 volts and DC motor requires 12 volts supply. Motor driver IC is used to convert 5v to 12v, which is required to drive the motor.

6. DC Motor: DC Motor is used to open the Gate barrier. This will be done when user has successfully performed the RFID swap operation with sufficient balance.

7. Buzzer: Buzzer will be turned on when invalid card is shown at the RFID reader.

8. Switch: If some user doesn't have the RFID card and he doesn't want to purchase the card then he can pay the cash to the government authority persons at the toll plaza. Authority person will then press the manual switch to open the Gate.

9. Keypad: Keypad is provided for the recharge option. Authority person can recharge the RFID cards using this keypad.

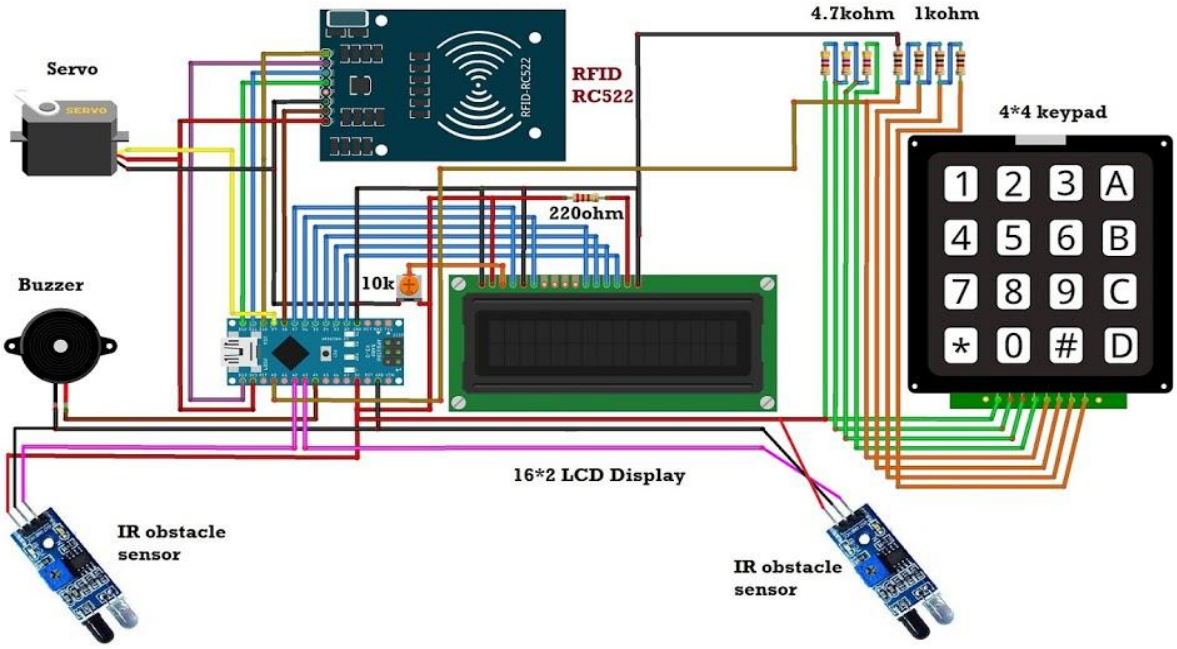

Fig. No. 2.5 : Circuit diagram

HARDWARE COMPONENTS

3.1 Introduction

The project aims in designing automated toll collection that can be operated using RFID technology. It is always important to have proper knowledge about all the hardware and software components of the project. We have used lots of components to make our project perfect. In our project the main and most important part is Arduino Nano ATmega328. We consider this part as the heart of our project because it contains all the software data in it. In our project there we also keep RFID, so that all the vehicles will be registered. Servo motor also has a major part in our project. It helps the toll gate to pull up and down after toll is paid by a vehicle. It senses all the vehicles weight and allows only those vehicles to use the bridge, which are allowed for the bridge.
In achieving the task the controller is loaded with a program written using Embedded 'C' language.

3.2. Hardware components

We have used lots of hardware and software components in our project. Now let's discuss about
those components in below
3.2.1. Arduino Nano ATmega328P
3.2.2. LCD1602 with Blue backlight
3.2.3. 4X4 Flexible Matrix Keypad With ABC Black & Red Color.
3.2.4. RC-522 13.56 MHz RFID Reader
3.2.5. SG90 Mini Gear Micro Servo Motor 9g
3.2.6. IR Obstacle Avoidance Module
3.2.7. 3.3-5V Continuous Tone Active Buzzer
3.2.8. 400 Tie Points Breadboard White
3.2.9 Male To Male and Male To FeMale Jumper Wires
3.2.10 10k potentiometer

3.2 Arduino Nano ATmega328p

The Arduino Nano is a small, complete, and breadboard-friendly board based on the ATmega328P (Arduino Nano 3.x). It has more or less the same functionality of the Arduino Duemilanove, but in a different package. It lacks only a DC power jack, and works with a Mini-B USB cable instead of a standard one.

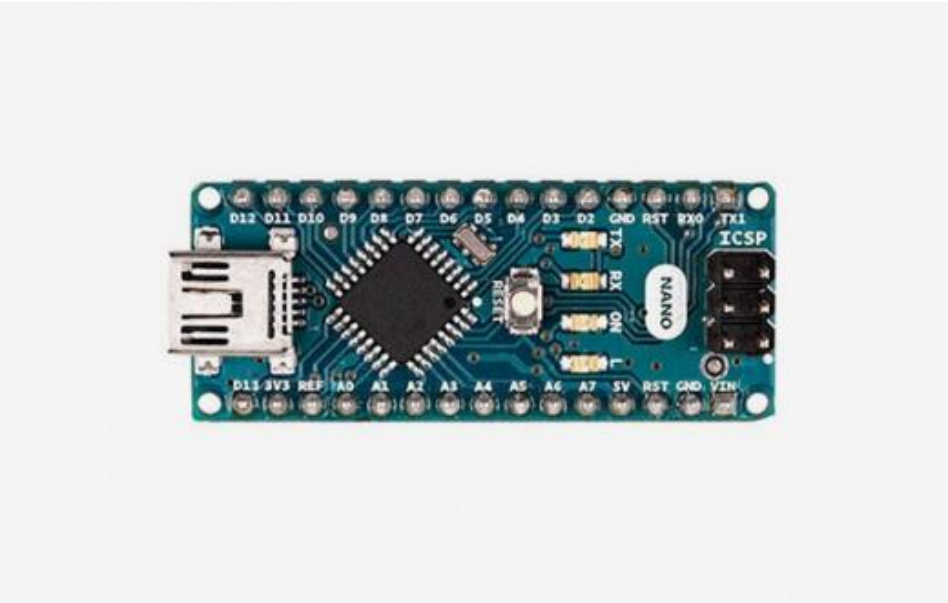

Fig. No. 3.1: Arduino Nano

3.3 Pin Configuration :

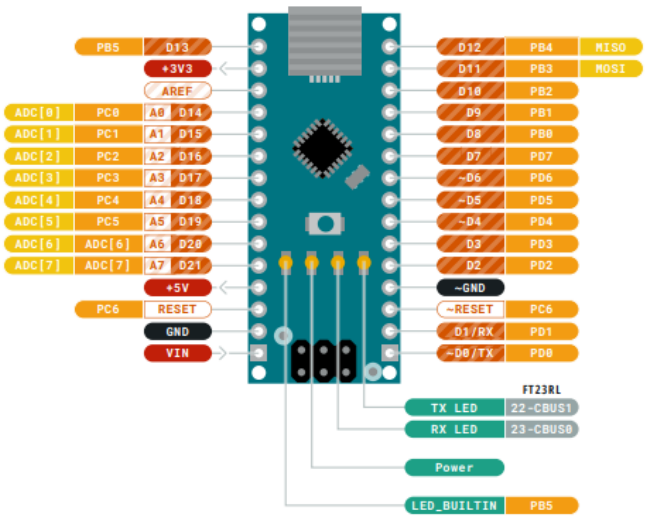

Fig. No.3.2: Pin configuration

3.4 Technical Specifications

Microcontroller	ATmega328
Architecture	AVR

Operating Voltage	5 V
Flash Memory	32 KB of which 2 KB used by bootloader
SRAM	2 KB
Clock Speed	16 MHz
Analog IN Pins	8
EEPROM	1 KB
DC Current per I/O Pins	40 mA (I/O Pins)
Input Voltage	7-12 V
Digital I/O Pins	22 (6 of which are PWM)
PWM Output	6
Power Consumption	19 mA
PCB Size	18 x 45 mm
Weight	7 g
Product Code	A000005

Power

The Arduino Nano can be powered via the Mini-B USB connection, 6-20V unregulated external power supply (pin 30), or 5V regulated external power supply (pin 27). The power source is automatically selected to the highest voltage source.

Memory

The ATmega328 has 32 KB, (also with 2 KB used for the bootloader. The ATmega328 has 2 KB of SRAM and 1 KB of EEPROM.

Input and Output

Each of the 14 digital pins on the Nano can be used as an input or output, using pinMode(), digitalWrite(), and digitalRead() functions. They operate at 5 volts. Each pin can provide or receive a maximum of 40 mA and has an internal pull-up resistor (disconnected by default) of 20-50 kOhms. In addition, some pins have specialized functions:

- Serial: 0 (RX) and 1 (TX). Used to receive (RX) and transmit (TX) TTL serial data. These pins are connected to the corresponding pins of the FTDI USB-to-TTL Serial chip.
- External Interrupts: 2 and 3. These pins can be configured to trigger an interrupt on a low value, a rising or falling edge, or a change in value. See the attachInterrupt() function for details.
- PWM: 3, 5, 6, 9, 10, and 11. Provide 8-bit PWM output with the analogWrite() function.
- SPI: 10 (SS), 11 (MOSI), 12 (MISO), 13 (SCK). These pins support SPI communication, which, although provided by the underlying hardware, is not currently included in the Arduino language.

- LED: 13. There is a built-in LED connected to digital pin 13. When the pin is HIGH value, the LED is on, when the pin is LOW, it's off.

The Nano has 8 analog inputs, each of which provide 10 bits of resolution (i.e. 1024 different values). By default they measure from ground to 5 volts, though is it possible to change the upper end of their range using the analogReference() function. Analog pins 6 and 7 cannot be used as digital pins. Additionally, some pins have specialized functionality:

- I2C: A4 (SDA) and A5 (SCL). Support I2C (TWI) communication using the Wire library (documentation on the Wiring website).

There are a couple of other pins on the board:

- AREF. Reference voltage for the analog inputs. Used with analogReference().
- Reset. Bring this line LOW to reset the microcontroller. Typically used to add a reset button to shields which block the one on the board.

Communication

The Arduino Nano has a number of facilities for communicating with a computer, another Arduino, or other microcontrollers. The ATmega328 provide UART TTL (5V) serial communication, which is available on digital pins 0 (RX) and 1 (TX). An FTDI FT232RL on the board channels this serial communication over USB and the FTDI drivers (included with the Arduino software) provide a virtual com port to software on the computer. The Arduino software includes a serial monitor which allows simple textual data to be sent to and from the Arduino board. The RX and TX LEDs on the board will flash when data is being transmitted via the FTDI chip and USB connection to the computer (but not for serial communication on pins 0 and 1). A Software Serial library allows for serial communication on any of the Nano's digital pins. The ATmega328 also support I2C (TWI) and SPI communication. The Arduino software includes a Wire library to simplify use of the I2C bus. To use the SPI communication, please see ATmega328 datasheet.
Programming

The Arduino Nano can be programmed with the Arduino software (download). Select "Arduino Duemilanove or Nano w/ ATmega328" from the Tools > Board menu (according to the microcontroller on your board). The ATmega328 on the Arduino Nano comes preburned with a bootloader that allows you to upload new code to it without the use of an external hardware programmer. It communicates using the original STK500 protocol. You can also bypass the bootloader and program the microcontroller through the ICSP (In-Circuit Serial Programming) header using Arduino ISP or similar.

Automatic (Software) Reset

Rather then requiring a physical press of the reset button before an upload, the Arduino Nano is designed in a way that allows it to be reset by software running on a connected computer. One of the hardware flow control lines (DTR) of the FT232RL is connected to the reset line of the ATmega328 via a 100 nanofarad capacitor. When this line is asserted (taken low), the reset line drops long enough to reset the chip. The Arduino software uses this capability to allow you to upload code by simply pressing the upload button in the Arduino environment. This means that the bootloader can have a shorter timeout, as the lowering of DTR can be well-coordinated with the start of the upload. This setup has other implications. When the Nano is connected to either a computer running Mac OS X or Linux, it resets each time a connection is made to it from software (via USB). For the following half-second or so, the bootloader is running on the Nano. While it is programmed to ignore malformed data (i.e. anything besides an upload of new code), it will intercept the first few bytes of data sent to the board after a connection is opened. If a sketch running on the board receives one-time configuration or other data when it first starts, make sure that the software with which it communicates waits a second after opening the connection and before sending this data.

3.5 LCD1602 with Blue backlight

LCD (Liquid Crystal Display) screen is an electronic display module and has a wide range of applications. This 16x2 LCD display is very basic module and is very commonly used in various devices and circuits. These modules are preferred over seven segments and other multi segment LEDs. The reasons being: LCDs are economical; easily programmable; have no limitation of displaying special & even custom characters (unlike in seven segments), animations and so on.

Fig.No. 3.3: Lcd Display

Features :
•LCD display module with blue blacklight.
•Wide viewing angle and high contrast.
•Built-in industry standard HD44780 equivalent LCD controller.
•Commonly used in: copiers, fax machines, laser printers,
industrial test equipment, networking equipment such as routers and storage devices.
•LCM type: Characters
•Can display 2-lines X 16-characters.
•Voltage: 5V DC.
•Module dimension: 80mm x 35mm x 11mm.

•Viewing area size: 64.5mm x 16mm

3.6. 4X4 Flexible Matrix Keypad With ABC Black & Red Color

The Keypad library allows your Arduino to read a matrix type keypad. You can scavenge these keypads from old telephones or you can get them from almost any electronics parts store for less than $5 USD. They come in 3x4, 4x4 and various other configurations with words, letters and numbers written on the keys. This library is capable of supporting all of those.

Procedure

1. Connect your Ohm meter leads to pins 1 and 2.
2. Press all the buttons until the meter indicates a closure.
3. Write down the pin numbers next to the column and row for the key you just found. Example: Your meter is connected to pins 1 and 5. When you pressed the number 7 your meter reacted. Write 1 under COL0 and 5 next to ROW2.
4. If the meter didn't react then move the meter lead from pin 2 to pin 3 and repeat steps 2 and 3 above.
5. Now, keep moving the lead to the next pin and repeat steps 2 and 3 for each pin.
6. Once you have reached the end move the first meter lead from pin 1 to pin 2 and repeat steps 2 and 3 while connecting the second meter lead to pins 3 through the highest pin.
7. Once you have completely identified all the pins on the diagram then you can safely ignore any unused keypad pins. You are now ready to wire the keypad to your Arduino.

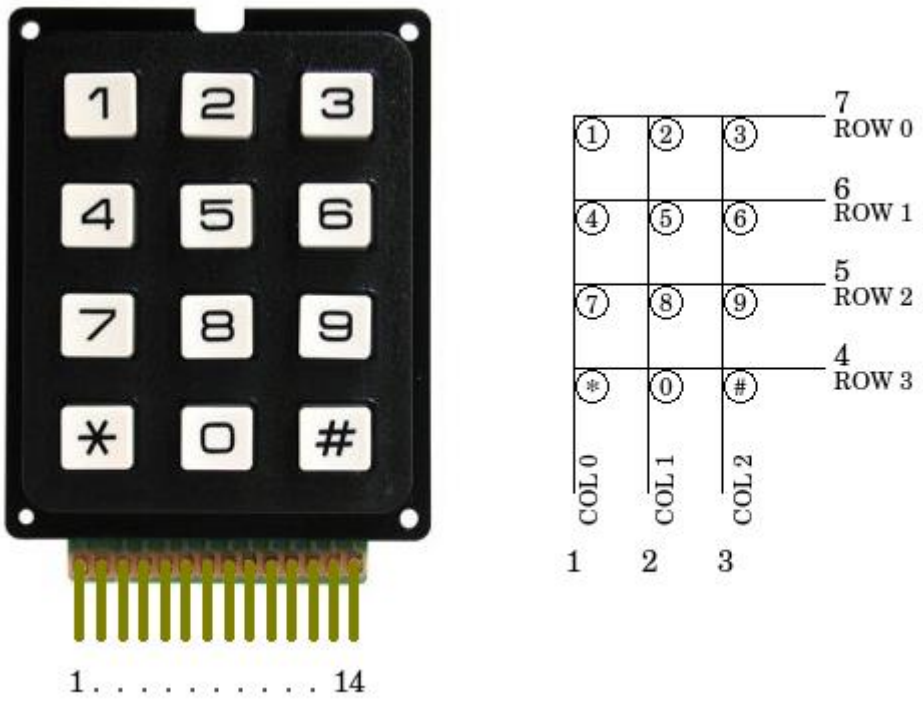

Fig. No.3.4: Keypad

3.6 RC-522 13.56 MHz RFID Reader

3.6.1 INTRODUCTION TO RFID

The goal of our project group was to design the replica of an enlarged version of the RFID toll station for automating the process of toll collection. After studying various techniques like GPS, bar-coding etc., which are also techniques of collecting toll at the cost of huge capital investments; we stuck upon Radio Frequency Identification, an emerging technology applied for tracking and communication.

This low cost MFRC522 based RFID Reader Module is easy to use and can be used in a wide range of applications. RC522 is a highly integrated transmission module for contactless communication at 13.56 MHz this transmission module utilizes an outstanding modulation and demodulation concept completely integrated for different kinds of contactless communication methods and protocols at 13.56 MHz

The MFRC522 is a highly integrated reader/writer IC for contactless communication at 13.56 MHz

Features:

- MFRC522 chip based board
- Operating frequency: 13.56MHz
- Supply Voltage: 3.3V
- Current: 13-26mA
- Read Range: Approx 3cm with supplied card and fob
- SPI Interface
- Max Data Transfer Rate: 10Mbit / s

- Dimensions: 60mm × 39mm

Fig.No. 3.5 : RC-522 13.56 MHz RFID Reader

3.6.2 WHAT IS RFID?

RFID (Radio Frequency Identification) means providing electronic identity to any object. Electronic information about the object is stored in RFID chip embedded or attached to the object. It's an area of automation which has quickly been gaining momentum in recent years and is now being seen as a radical means of enhancing data handling processes, complementary in many ways to other data capturing technologies such as bar-coding. A range of devices and associated systems are available to satisfy even broader range of applications which will change the course of industry particularly in the supply-chain area. The objective of any RFID system is to carry data in suitable transponders, generally known as tags, and to retrieve data, by machine at a suitable time and place to satisfy particular needs.

Data within a tag may provide identification for an item in manufacturing, goods in transit, or the identity of a vehicle. By including additional data the prospect is provided for supporting applications through item specific information or instructions immediately available on reading the tag. With an RFID reader, the electronic identity (code in the form of several bits) can be read wirelessly. This is where RFID differs from other e-tagging technologies such as barcoding which use optical recognition. Since RFID uses radio waves, it does not require any line of sight.

3.6.3 Transponder:

A transponder is generally known as RFID tags stores the data according to the application and are available in a variety of shapes and sizes according to the application. RFID tags are mainly classified in two categories:

3.6.4 Active tags:

Active tags are powered by an internal battery and typically read/write, i.e. tag can be rewritten and/or modified. Active RFID are designed to actively transmit the data to the reader using the power of a battery attached to the tag. The radio frequency received from the Transreceiver is used for communication only.

3.6.5 Passive tags:

Operates without external power source and obtain the operating power from the reader.Passive tags are consequently much lighter than the active tags. They offer a virtually unlimited operational lifetime. They are designed to transmit the data by reflecting or backscattering, the RF energy back to the reader. No battery is required to read the data that has been stored on the RFID tag. The receiver becomes both communication device and provides energy for the tags.

3.6.6 ADVANTAGES OF RFID

1. RFID functions through both natural and man-made metallic materials.
2. RFID allows flexible tag placement and can be embedded into an object. It reads changes or adds information to a tag at any user read point.
3. RFID stored information can be protected with a range of security options.
4. RFID tags can be rewritten repeatedly or used for permanent data retention.
5. RFID provides an extra level of information in some cases as RFID tags can be programmed more than once.
6. The ability to read multiple items simultaneously, to read and write information etc, and a whole new layer to AIDC (AUTO IDENTIFICATION AND DATA CAPTURE).
7. The tag does not need to be in line of sight with the receiver to be read (compare to a barcode and its optical scanner) (Shepard, 2004, p. 58).
8. RFID tags can store a lot of information, and follow instructions
9. Has the ability to pinpoint location
10. Technology is versatile: can be smaller than a thumb tack or can be the size of a tablet, depending on its use
11. . According to a report that studied the use of RFID within the average Vendor Managed Inventory (VMI), carried out by Professor Tsan-Ming Choi of the Hong Kong Polytechnic University, it was concluded that the use of RFID actually enhanced each supply chain's system performance and increased expected profit (2011)

3.6.7 LIMITATIONS OF RFID

The major limitations of RFID are:
1. No RFID standard has been set yet. (The Auto-ID centre has worked with standard bodies Uniform Code Council and EAN International to come up with electronic product code, but it is not yet considered a standard).
2. The demand should also drive down the price. (Wal-Mart says that a need for one billion RFID tags should drive down the price to five cents each.)
The other major limitations are:

 The smart tag technology is yet to be perfected , today on an average 20% of the tags do not function properly
 Physical limitations like reading through liquid or metals still exist
 Accurate read rates on some items can be very low
 Nylon conveyor belts and other RFs can disrupt the tag transmissions in warehouses
 Increase in expenses - the suppliers will have to equip their warehouses and transport vehicles with readers. These readers have to be connected to the computer networks for exchange of information. All these mean additional costs related to hiring technical consultants and additional hardware.
 Wal-Mart inventory networks are burdened with the task of handling data of billions of
their products. The company has to hence invest in extremely sophisticated system to process the data properly. In the tie up with IBM Global Services that has resulted in deployment of RFID equipment in grocery sections of seven pilot Wal-Mart stores, IBM consultants have encountered interference from equipment such as handheld walkie-talkies, forklifts, and other devices typically found in distribution facilities. Cell phone towers located near the premises, which transmit at the high end of the frequency band, sometimes leak unwanted radio waves into RFID readers.

3.6.8 APPLICATIONS OF RFID

 Customized RFID solutions are now available for all applications.
 Prisoners in certain ways are tagged to prevent violent behavior and possibly their escape.
 Petrol stations across America use tracking systems as payment systems for fuel.
 At airport tagged baggage can be easily located even if they are at few meters away from the wrong conveyer belt.
 In Mumbai Marathon for the first time RFID tags were used in a marathon in Asia to track each competitor and how fast they were running.

3.7 SG90 Mini Gear Micro Servo Motor 9g

3.7.1 What is a Servo Motor?

A servo motor is a rotary actuator or linear actuator that allows for precise control of angular or linear position, velocity and acceleration. It consists of a suitable motor coupled to a sensor for position feedback. It also requires a relatively sophisticated controller, often a dedicated module designed specifically for use of servomotors.
Servo Motor is a closed-loop servomechanism that uses position feedback to control it's motion and final position. The input to its control is a signal (either analogue or digital) representing the position commanded for the output shaft.
The SG91 features plastic gears. SG91 weight 9g and Color of case – Blue. This is Tower Pro SG-91 Micro Servo for helicopter, 3D-flyer and F3A.It is very light. So we are using it to pull up and down the gate of the toll plaza pass way. It comes with a 3-pin power and control cable and mounting hardware.

Fig. No. 3.6 : Servo motor .

3.7.2 Specifications

- Stall torque 1.8kg/cm(4.8V)
- Operating speed 0.1sec/60degree(4.8v)
- Operating voltage 4.8V
- Temperature range0 -55C
- Dead band width 10us

Dimension 23x12.2x29mm

3.8 IR Obstacle Avoidance Module

3.8.1 Infrared obstacle avoidance sensors

This Infrared Obstacle Avoidance Sensor returns a signal when it detects an object in range. The range of the sensor is around 2-40 cm is distance. It operates at 3.5 to 5 volts at around 20 milliamps. The Obstacle Avoidance Sensors usually come in two types - with 3 and 4 pins. The 3 pin version does not have the ability to be enabled/disabled. The 4 pin version has optional Enable pin. Infrared obstacle avoidance sensor is designed to detect obstacles or the difference in reflective services. One application is to help a wheeled robot avoid obstacles with a sensor to react to adjustable distance settings. This device has an infrared transmitter and receiver, that forms the sensor pair. The transmitter LED emits a certain frequency of infrared, which the receiver LED will detect. The receiving LED will detect some of the signal back and will trigger the digital on/off “signal” pin when a specific threshold “distance” has been detected. Most boards will have 2 potentiometers, one of which is to adjust how sensitive the sensor is. You can use it to adjust the distance from the object at which the sensor detects it. Typically, the other potentiometer, which changes the transmitter IR frequency is not adjusted.

3.8.2 Specifications

- Working voltage: DC 3.3V-5V
- Working current: ≥ 20mA
- Operating temperature: -10 ℃ - +50 ℃
- detection distance :2-40cm
- IO Interface: 4-wire interfaces (- / + / S / EN)
- Output signal: TTL level (low level there is an obstacle, no obstacle high)
- Adjustment: adjust multi-turn resistance

- Effective angle: 35 °
- Size: 28mm × 23mm
- Weight Size: 9g

Here we use the obstacle avoidance module and a digital interface, built-in 13 LED build a simple circuit, making avoidance warning lamp, the obstacle avoidance Sensor Access Digital 3 interface, when obstacle avoidance sensor senses a signal, LED light, and vice versa off.

Fig. No. 3.7: IR Obstacle Avoidance Module

3.9 Jumper Wires

Fig.No. 3.8: Male to Male jumper

The best part is they come in a 40-pin ribbon cable. we can always pull the ribbon wires off to make individual jumpers, or keep them together to make neatly organized wire harnesses.

3.10 Solder less Breadboard

A breadboard is a construction base for prototyping of electronics. Originally it was literally a bread board, a polished piece of wood used for slicing bread. In the 1970s the solder less breadboard (AKA plug board, a terminal array board) became available and nowadays the term "breadboard" is commonly used to refer to these. "Breadboard" is also a synonym for "prototype".

Because the solder less breadboard does not require soldering, it is reusable. This makes it easy to use for creating temporary prototypes and experimenting with circuit design. For this reason, solder less breadboards are also extremely popular with students and in technological education. Older breadboard types did not have this property. Astripboard (veroboard) and similar prototyping printed circuit boards, which are used to build semi-permanent soldered prototypes or one-offs, cannot easily be reused. A variety of electronic systems may be prototyped by using breadboards, from small analog and digital circuits to complete central processing units (CPUs) .

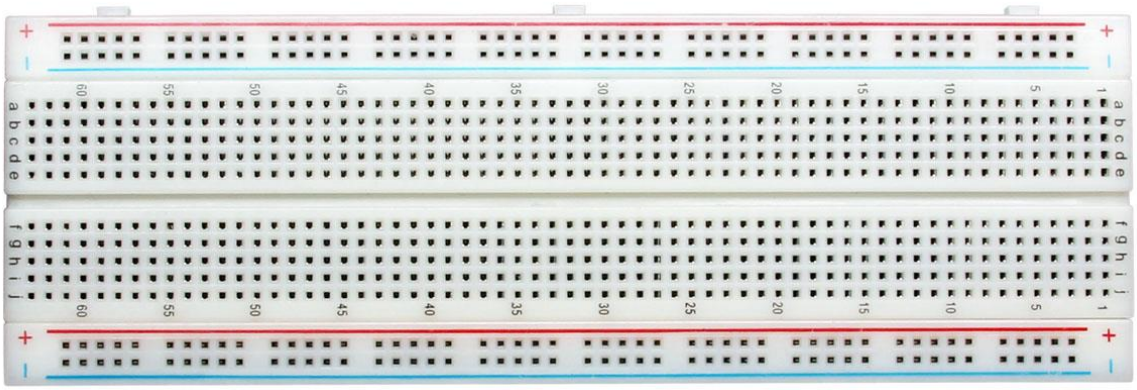

Fig. No.3.9: Breadboard

3.11. 3.3-5V Continuous Tone Active Buzzer

These 5v Active Buzzer generate Continuous Beep / Tone when powered by a DC source. This type of buzzer only require ON/OFF type of input. The Active buzzers are different from passive buzzers which require AC or Square Wave signal. In passive Buzzers the tone frequency is fixed and can not be changed.

Fig. No. 3.10: Buzzer

ARDUINO INTERFACING CODE

4.1 Coding

```
#include <SPI.h>
#include <MFRC522.h>
#include <OnewireKeypad.h>
#include <LiquidCrystal.h>
#include <Servo.h>

LiquidCrystal lcd(7, 6, 5, 4, 3, 2);

Servo servo;
int servoPos = 0;

#define sensorPin1 A2
#define sensorPin2 A3
#define buzzerPin A4

int senVal1 = 0;
int senVal2 = 0;

#define RST_PIN 8
#define SS_PIN 10

int card1Balance = 5000;
int card2Balance = 300;

#define num 7
char Data[num];
byte data_count = 0;

String num1, num2, card, card2;
int a, b;
char Key;

bool recharge = true;

MFRC522 mfrc522(SS_PIN, RST_PIN);

int state = 0;

char KEYS[] = {
  '1', '2', '3', 'A',
  '4', '5', '6', 'B',
  '7', '8', '9', 'C',
  '*', '0', '#', 'D'
};

//OnewireKeypad <Print, 16 > KP2(Serial, KEYS, 4, 4, A0, 4700, 1000, ExtremePrec );
OnewireKeypad <Print, 16 > KP2(Serial, KEYS, 4, 4, A0, 4700, 1000, 10000 );
void setup () {
  lcd.begin(16, 2);
  Serial.begin(9600);

  servo.attach(9);

  servo.write(30);

  pinMode(sensorPin1, INPUT);
  pinMode(sensorPin2, INPUT);
  pinMode(buzzerPin, OUTPUT);

  KP2.SetKeypadVoltage(5.0);

  SPI.begin();
  mfrc522.PCD_Init();

  lcd.setCursor(0, 0);
  lcd.print(" Automatic toll");
  lcd.setCursor(0, 1);
  lcd.print("colection system");
  delay(3000);
  lcd.clear();
}
void loop()
{

  if (recharge == 0)
  {
    reCharge();
  }
```

```
  else
  {
    lcd.setCursor(0, 0);
    lcd.print("   Welcome!!!");
    sensorRead();
    rfid();
    KeyPad();
    if (senVal1 == 0)
    {
      servoDown();
      lcd.clear();
      lcd.setCursor(0, 0);
      lcd.print("Vehicle detected");
      delay(1000);
      lcd.clear();
      lcd.setCursor(0, 0);
      lcd.print("Put your card to");
      lcd.setCursor(0, 1);
      lcd.print("the reader.....");
      delay(2000);
      lcd.clear();

    }
    else if (senVal2 == 0 && state ==
1)
    {
      servoUp();
      lcd.clear();
      lcd.setCursor(0, 0);
      lcd.print("Have a safe");
      lcd.setCursor(0, 1);
      lcd.print("journey");
      delay(1000);
      lcd.clear();
      state = 0;
    }
  }
}

void servoDown()
{
  servo.attach(9);
  for (servoPos = 30; servoPos <= 120;
servoPos += 1)
  {
    servo.write(servoPos);
    delay(5);
  }
}

void servoUp()
{
  servo.attach(9);
  for (servoPos = 120; servoPos >= 30;
servoPos -= 1)
  {
    servo.write(servoPos);
    delay(5);
  }
}

void sensorRead()
{
  senVal1 = digitalRead(sensorPin1);
  senVal2 = digitalRead(sensorPin2);
}

void rfid()
{
  if ( !
mfrc522.PICC_IsNewCardPresent())
  {
    return;
  }
  if ( !
mfrc522.PICC_ReadCardSerial())
  {
    return;
  }

  String content = "";
  for (byte i = 0; i < mfrc522.uid.size;
i++)
  {

content.concat(String(mfrc522.uid.uid
Byte[i] < 0x10 ? " 0" : " "));

content.concat(String(mfrc522.uid.uid
Byte[i], HEX));
  }
  content.toUpperCase();
```

```
  if (content.substring(1) == "F1 8F 4A 2D")
  {
    if (card1Balance >= 500)
    {
      lcdPrint();
      card1Balance = card1Balance - 500;
      lcd.setCursor(9, 1);
      lcd.print(card1Balance);
      delay(2000);
      lcd.clear();
      state = 1;
    }
    else
    {
      card = content.substring(1);
      LcdPrint();
      lcd.setCursor(9, 1);
      lcd.print(card1Balance);
      lcd.print(" Tk");
      delay(2000);
      lcd.clear();
      lcd.setCursor(0, 0);
      lcd.print("Please Recharge");
      delay(1000);
      lcd.clear();
      state = 0;
    }
  }
  else if (content.substring(1) == "F4 C2 37 BB")
  {
    if (card2Balance >= 500)
    {
      lcdPrint();
      card2Balance = card2Balance - 500;
      lcd.setCursor(9, 1);
      lcd.print(card2Balance);
      delay(2000);
      lcd.clear();
      state = 1;
    }
    else
    {
      card = content.substring(1);
      LcdPrint();
      lcd.setCursor(9, 1);
      lcd.print(card2Balance);
      lcd.print(" Tk");
      delay(2000);
      lcd.clear();
      lcd.setCursor(0, 0);
      lcd.print("Please Recharge");
      lcd.clear();
      delay(1000);
      state = 0;
    }
  }

  else  {
    digitalWrite(buzzerPin, HIGH);
    lcd.setCursor(0, 0);
    lcd.print("Unknown Vehicle");
    lcd.setCursor(0, 1);
    lcd.print("Access denied");
    delay(1500);
    lcd.clear();
    digitalWrite(buzzerPin, LOW);
  }
}

void KeyPad()
{
  byte KState = KP2.Key_State();

  if (KState == PRESSED)
  {
    Key = KP2.Getkey();
    if (Key)
    {
      if (Key == 'A')
      {
        lcd.clear();
        lcd.setCursor(0, 0);
        lcd.print("Recharging Mode.");
        lcd.setCursor(0, 1);
        lcd.print("................");
        delay(1500);
        lcd.clear();
```

```
        recharge = 0;
      }
    }
  }
}

void clearData()
{
  while (data_count != 0)
  {
    Data[data_count--] = 0;
  }
  return;
}

void reCharge()
{

  lcd.setCursor(0, 0);
  lcd.print ("Enter the amount");

  byte KState = KP2.Key_State();

  if (KState == PRESSED)
  {
    Key = KP2.Getkey();
    if (Key)
    {
      if (Key == 'D')
      {
        if (card == "F1 8F 4A 2D")
        {
          num1 = Data;
          card1Balance = num1.toInt() +
card1Balance;
          lcd.clear();
          lcd.setCursor(0, 0);
          lcd.print("Your current");
          lcd.setCursor(0, 1);
          lcd.print("balance: ");
          lcd.setCursor(9, 1);
          lcd.print (card1Balance);
          lcd.print(" Tk");
          delay(3000);
          clearData();
          lcd.clear();
          recharge = 1;
        }
        else if (card == "F4 C2 37 BB")
        {
          num2 = Data;
          card2Balance = num2.toInt() +
card2Balance;
          lcd.clear();
          lcd.setCursor(0, 0);
          lcd.print("Your current");
          lcd.setCursor(0, 1);
          lcd.print("balance: ");
          lcd.setCursor(9, 1);
          lcd.print (card2Balance);
          lcd.print(" Tk");
          delay(3000);
          clearData();
          lcd.clear();
          recharge = 1;
        }
      }
      else
      {
        Data[data_count] = Key;
        lcd.setCursor(data_count, 1);
        lcd.print(Data[data_count]);
        data_count++;
      }
    }
  }
}
void lcdPrint()
{
  digitalWrite(buzzerPin, HIGH);
  delay(200);
  digitalWrite(buzzerPin, LOW);
  delay(100);
  lcd.clear();
  lcd.setCursor(0, 0);
  lcd.print("  Successfully");
  lcd.setCursor(0, 1);
  lcd.print(" paid your bill");
  delay(1500);
  lcd.clear();
  lcd.setCursor(0, 0);
  lcd.print("Your Remaining");
```

```
  lcd.setCursor(0, 1);
  lcd.print("balance: ");
}

void LcdPrint()
{
  digitalWrite(buzzerPin, HIGH);
  delay(200);
  digitalWrite(buzzerPin, LOW);
  delay(100);
  lcd.clear();
  lcd.setCursor(0, 0);
  lcd.print("  Your balance");
  lcd.setCursor(0, 1);
  lcd.print(" is insufficent");
  delay(1500);
  lcd.clear();
  lcd.setCursor(0, 0);
  lcd.print("Your Remaining");
  lcd.setCursor(0, 1);
  lcd.print("balance: ");
}
```

PICTURE OF MY PROJECT

CONCLUSION

Finally the automatic toll collection project using by RFID using Arduino Nano Atmega328P is working successfully. Although some problem was drawn but it was shooted as said in the discussion. Times are changing and even this Manual Technique for Taxation at toll station has to change and seeing a change in mind set of every individual this technology would also be taken whole heartedly. And we would see that paying Toll at the Toll station won't be that time consuming and much accurate and preferred across every nook and corner of the globe wherever there would be a toll station. And as described above about the merits of this Toll station we don't think that its not that far enough when we would see this technology being used in India and in terms benefiting the whole society as well as the company whose is involved in Toll taxation. RFID is a powerful technology, and it is likely to see world-wide deployment within the coming years. Continuous technological advancements of RFID have resulted in reduced cost of installation and maintenance of devices across different market segments. Comparing advantages and limitations of our system we can conclude that our system is beneficial for daily travellers and Toll station authorities to lessen the burden.

And finally, while RFID may seem to be a fairly simple and innocuous technology on the surface, a wide range of issues and choices need to be explored and resolved for its successful, wide-scale deployment. We are seeing great promise and signs that the RFID and future upcoming sensor network technologies will help to change the way we think about our manufacturing processes and the interactions with the people and customers. On the concluding node we can say that we have successfully implemented one of the phase of our project but still have some improvements and advancements to be done.

FUTURE SCOPE

As of in future we are planning of making this system more accurate. Also we will be probably implementing the facility of post charging the users account. Also we will be looking to send user a sms about his transaction details. Apart from these all the major modification that we are planning is to directly link the users' toll account with his bank account. Hence the toll tax will be directly deduced from the user's bank account instead of his toll account. Also in future we are looking to add a feature that will allow the government cars to pass through without collecting their tax.

Also we can use weight sensor to measure the load of the vehicle.

REFERENCES

[1] Sachin Bhosale,Dnyaneshwar Natha Wavhal. "Automated Toll Plaza System using RFID"IJSETR, Vol 2,Issue 1, Jan 2013.
[2] Janani SP, Meena S, Automatised Toll Gate System Using Passive RFID and GSM Technology, Vol. 5. Issue ECIA2012-3 Journal of Computer Applications, February 10,2012.
[3] Asif Ali Laghari, M. Sulleman Memon and Agha Sheraz Pathan, "RFID Based Toll Deduction System,"I.J. Information Technology and Computer Science, 2012, 4, 40-46
[4] Aniruddha Kumawat, Kshitija Chandramore, "Automation Toll Collection System Using RFID", Vol. 2, Issue 2, April-June 2014
[5] Asif Ali Laghari, M. Sulleman Memon, Agha Sheraz Pathan, "RFID Based Toll Deduction System", I.J. Information Technology and Computer Science, April, 2012
[6] Janani S P, Meena S, "Automatised Toll Gate System Using Passive RFID and GSM Technology", Journal of Computer Applications, Vol. 5, Issue 12-3, February 10, 2012
[7] Pranoti salunke, Poonam Malle, Kirti Datir, Jayshree Daluke, "Automated Toll Collection System Using RFID" IOSR Journal of Computer Engineering (IOSR-JCE), Vol 9 Issue 2, Feb 2013
[8] AungMyint Win, Chaw MyatNwe, KyawZinLatt, "RFID Based Automated Toll Collection Plaza", International Journal of Scientific and Research Publications, Volume 4, Issue 6, June 2014 Automated Toll Tax Collection System Using RFID
[9] KhadijahKamarulazizi and DR. Wadad Ismail, "Electronic toll collection system using passive RFID technology", School of Electrical and Electronic, University Science Malaaysia, Journal of Theoretical and Applied Information Technology, 2005-2010
[10] Ganesh K. Andurkar and Vidya R. Ramteke, "Smart highway Electronic Toll Collection system", International Journal of Innovative Research in Computer and Communication Engineering, Vol. 3, Issue 5, May 2015
[11] Md. Saidul Hoque, Md. Jawed Alam, Md. Akbar Hossain Patwary, A.S.M. Elias Shah, A.H.M. Javed Hossain Talukdar, Mobashera Sadia Haque and Md. Shahriar Rahman Khan, Roads and Highways Department, Dhaka-1000, Bangladesh, Masaaki Tatsumi and Prosenjit Kumar Ghosh, Oriental Consultants Global Co. Ltd., Tokyo-151-0071, Japan, "Three 2nd bridges construction and existing bridges rehabilitation under KMG project, IABSE-JSCE Joint conference on Avances in Bridge Egineering-III, August 21-22, 2015
[12] David Levinson and Elva Chang, "A Model for Optimizing Electronic Toll Collection Systems", Department of Civil Engineering, University of Minnesota, Transportation Research Part A 37 (2003) 293-314, Received 6 September 1999; received in revised from 12 February 2002; accepted 19 February 2002
[13] Priyanka Sharma and Vivek Sharma ,"Electronic toll collection technologies: A state of art review" , an International Journal of Advanced Research in Computer Science and Software Engineering, Volume 4, Issue 7, July 2014, pp. 621-625
[14] Abdalla Mohammed Mohammed, Maryse Mamdouh Naguib Fahmy Nashed,

Michael Essam Amin Nasr, Mohammed Gamal El Prince and Nour El Din Mohammed Nour El Din, "Information and Communication Technologies Engineering Smart Road System", Uninettuno University – Helwan University, 3 August 2011

[15] Mohmoud Saffarzadeh and Abdolreza Rezaee-Arjroody, "Cost-Benefit Analysis of Electronic Toll Collection (ETC) System in Iranian Freeways", Case Study: Tehran-QOM Freeway, PIARC International Seminar on Intelligent Transport System (ITS) In Road Network Operations, August16, 2016

http://www.nyu.edu/projects/jerschow/pubs.html

http://www.ewek.com/category

http://www.ftc.gov

http://www.rfidjournal.com